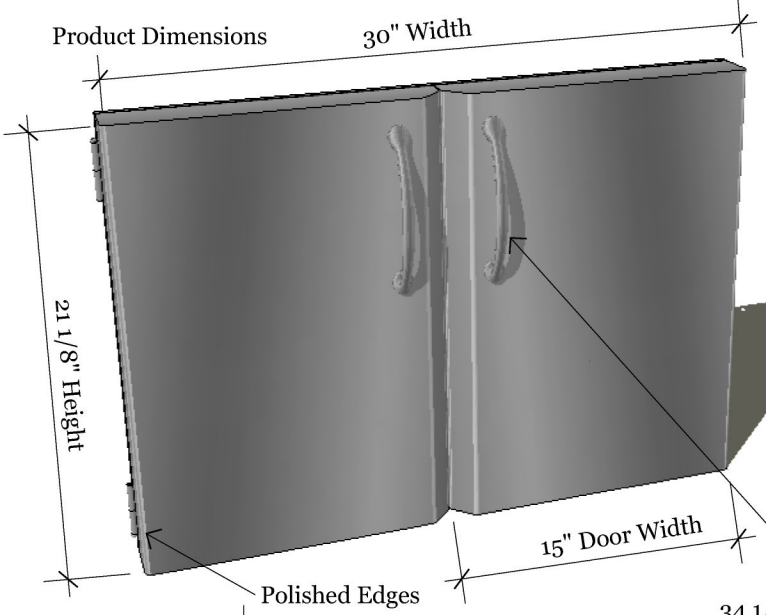

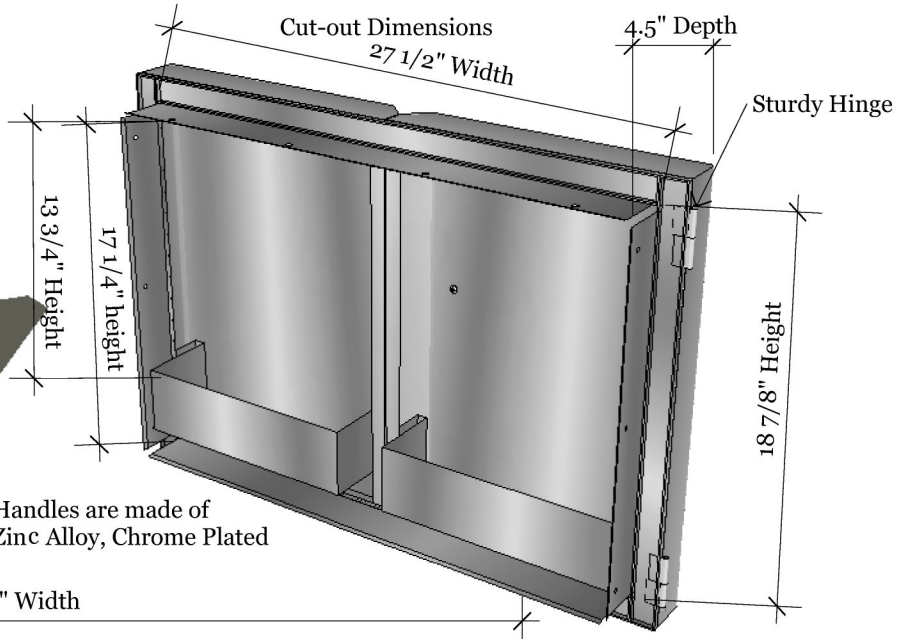

www.FLOGrills.com

Product:
30" Deluxe Double Access Door with Shelves

Item #:
FLO-DLX30

Description:
Stainless steel 30" double access door with shelves on rear of doors.

Product Size:
30" W x 21-1/8" H x 4.5" D

Cut-out Size:
27-1/2" W x 18-7/8" H
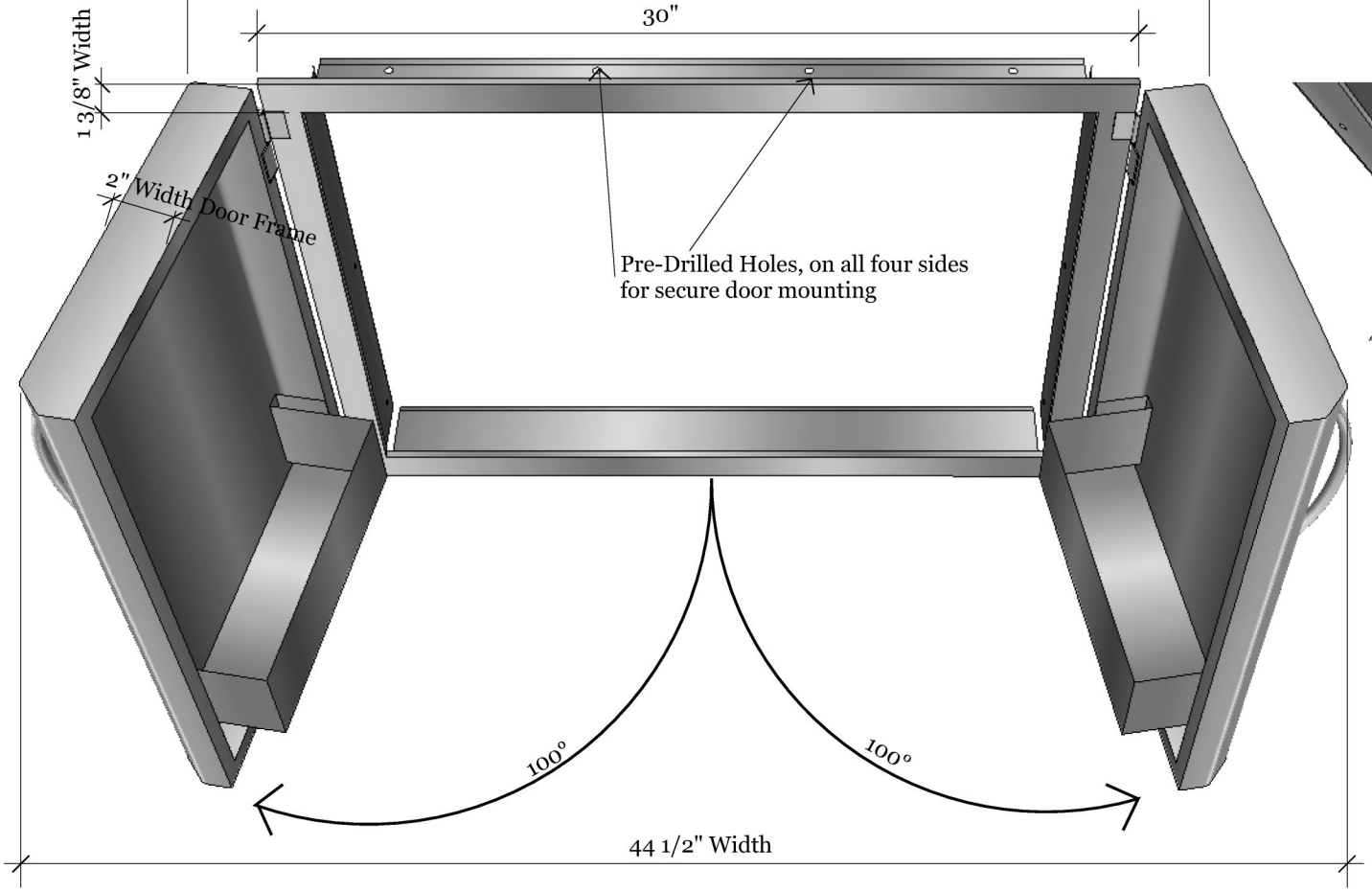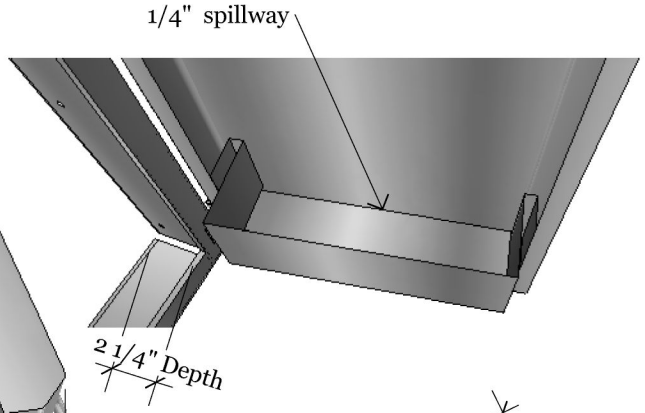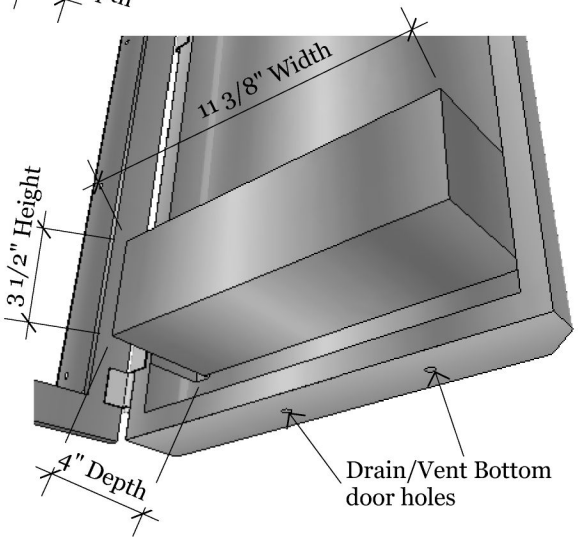
Weight:
20 LBS